TECHNICAL MANUAL

BLUE PAPER

OIZ H

2020

ORBEA

INDEX

GEOMETRY & SIZING	4
TECHNICAL SPECIFICATIONS	6
HEAD TUBE	8
REAR AXLE	9
LINKAGE	10
SHOCK HARDWARE	12
MAIN PIVOT	13
FRAME HARDWARE	14
CHAINGUIDE	16
CABLING	17
SHOCK PRESSURES	19
MAINTENANCE	20
WARRANTY	22
ADDITIONAL INFORMATION	23

GEOMETRY & SIZING

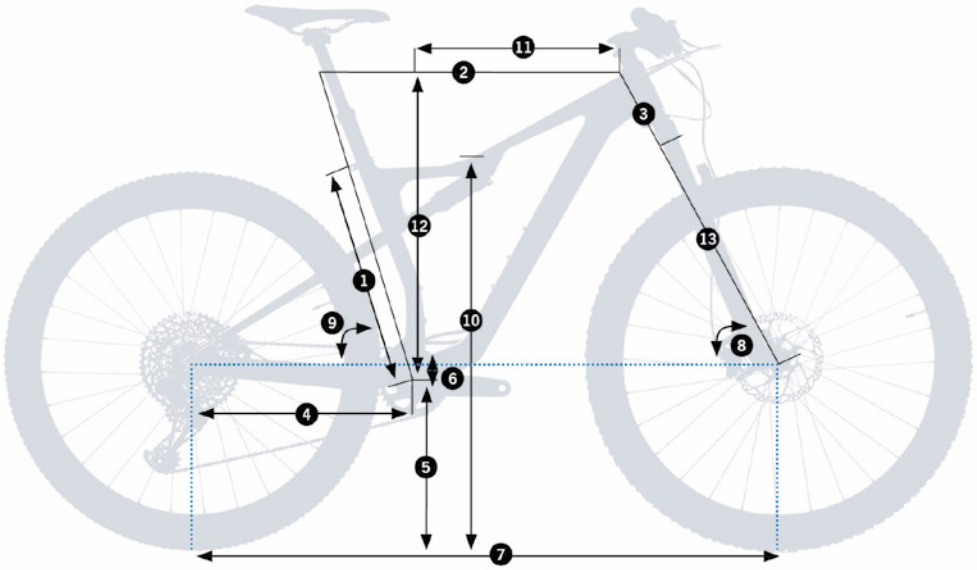

TALLAS	S-27.5" TR	S-29" TR	M-29" TR	L-29" TR	XL-29" TR	S-27.5" XC	S-29" XC	M-29" XC	L-29" -XC
1 - Seat Tube (C-T)	405	405	432	470	520	405	405	432	470
2 - Top Tube (EFF)	559	567	596	610	643	557	564	593	617
3 - Head Tube	95	90	95	105	120	95	90	95	105
4 - Chainstay	425	435	435	435	435	425	435	435	435
5 - BB Height	336	334	334	334	334	328	327	327	327
6 - BB Drop	21	40	40	40	40	29	47	47	47
7 - Wheelbase	1088	1101	1131	1155	1181	1081	1094	1123	1148
8 - Head Angle	68º	68º	68º	68º	68º	69º	69º	69º	69º
9 - Seat Angle	74º	74º	74º	74º	74º	75º	75º	75º	75º
10 - Standover Heigh	722	724	739	749	756		717	732	742
11 - Reach	397	387	425	446	446	407	407	435	456
12 - Stack	565	593	598	608	622	558	586	591	600
13 - Fork Length	508	524	524	524	524	488	504	504	504

** From MY2022, all Oiz Hydro models are equipped with 120mm travel fork and shock.*

HEIGHT (CM)	HEIGHT (IN)	SIZE
155-170	61.1"-66.9"	S-27.5"
155-170	61.1"-66.9"	S-29"
165-180	65.0"-70.9"	M-29"
178-190	70.1"-74.8"	L-29"
185-198	72.8"-78.0"	XL-29"

** Estimated measurements.*

TECHNICAL SPECIFICATIONS

FRAME MATERIAL	
FRONT TRIANGLE	ALUMINUM HYDRO TRIPLE BUTTED HIGH POLISH
REAR TRIANGLE	ALUMINUM HYDRO TRIPLE BUTTED
LINKAGE	ALUMINUM
INTENDED USE	XC, MARATHON, TRAIL
SIZES	S27,5, S, M, L, XL
REAR TRAVEL	100mm / 120mm(TR) **
FORK TRAVEL	100mm / 120mm(TR) **
WHEEL SIZE	27,5" (S27,5) / 29" (S,M,L,XL)
MAX TYRE SIZE	27,5X2,4(S27,5) / 29X2,4(S,M,L,XL)
FORK OFFSET	44mm
BOTTOM BRACKET	PRESSFIT (PF92)
HEADSET	INTEGRATED 1”1/8-1,5
REAR AXLE STANDARD	BOOST 148X12
REAR AXLE MEASUREMENTS	12X182
REAR AXLE THREAD	1.5mm
SEATPOST DIAMETER	31.6mm
SEATCLAMP DIAMETER	35mm
SEATPOST MAXIMUM INSERTION	S27,5: 205mm / S: 215mm / M: 260mm / L: 285mm / XL: 290mm
FRONT DERAILLEUR	N/A. ONLY 1X
MAX CHAINRING SIZE	36T/34T OVAL
MIN CHAINRING SIZE	30T
REAR BRAKE	DISC POST MOUNT *

MAX REAR ROTOR SIZE	180mm
MIN REAR ROTOR SIZE	160mm
SHOCK LENGHT (EYE-TO-EYE)	FOX I-LINE
TAMAÑO AMORTIGUADOR (EYE-TO-EYE)	190mm
SHOCK STROKE	40mm / 45mm(TR)
SHOCH HARDWARE	
FRONT TRIANGLE	8X30mm
SHOCK EXTENDER	8X21,84mm
CHAIN GUIDE	YES. DIRECT MOUNT ON SWINGARM
ICGS05 MOUNT	NO
CABLING	INTERNAL (FULL HOUSING)
LEFT-ROAD CABLING READY	YES. REAR BRAKE ENTERS THE FRAME ON THE LEFT
BOTTLE HOLDER	1 (S27,5 & S) / 2 (M,L,XL)
DI2 COMPATIBLE	NO
DRIVETRAIN COMPATIBILITY	11 AND 12 SPEED
POWER METER COMPATIBILITY	CONSULT MANUFACTURER´S SPECIFICATIONS
RECOMMENDED SAG	20%

** Not all calipers and rotors in the market are compatible with all frames.*
All componets specificated from Orbea have been tested. For aftermarket options, check componentes dimensions and tolerances befores purchasing.

*** From MY2022, all Oiz Hydro models are equipped with 120mm travel fork and shock.*

HEAD TUBE

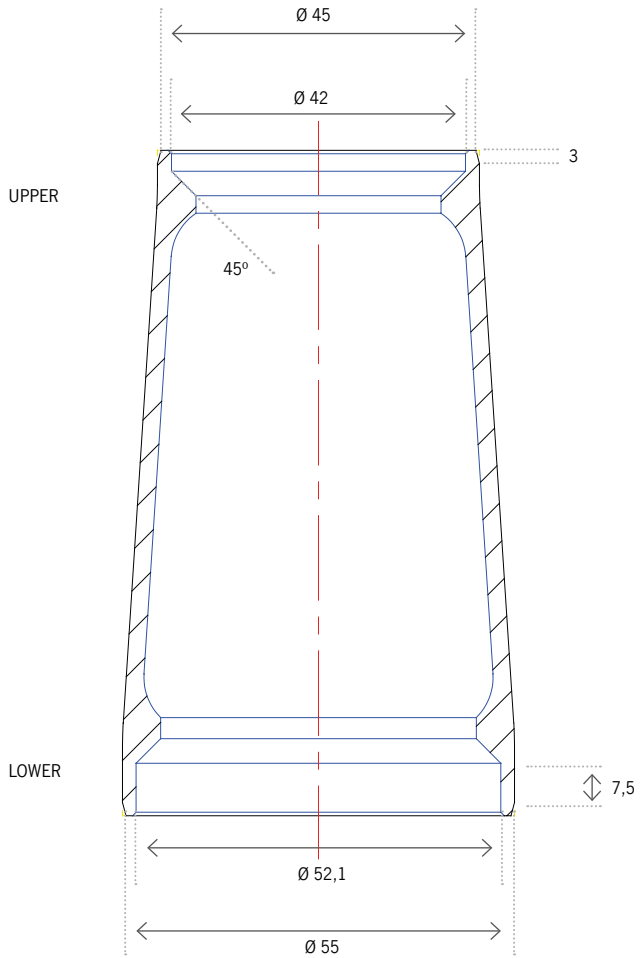

OIZ H 20 HEADSET KIT

KIT Nº: X023	QUANTITY
HEADSET ACROS 11/8-1,5 INT	1
TOPCAP ACROS 11/8	1

REAR AXLE

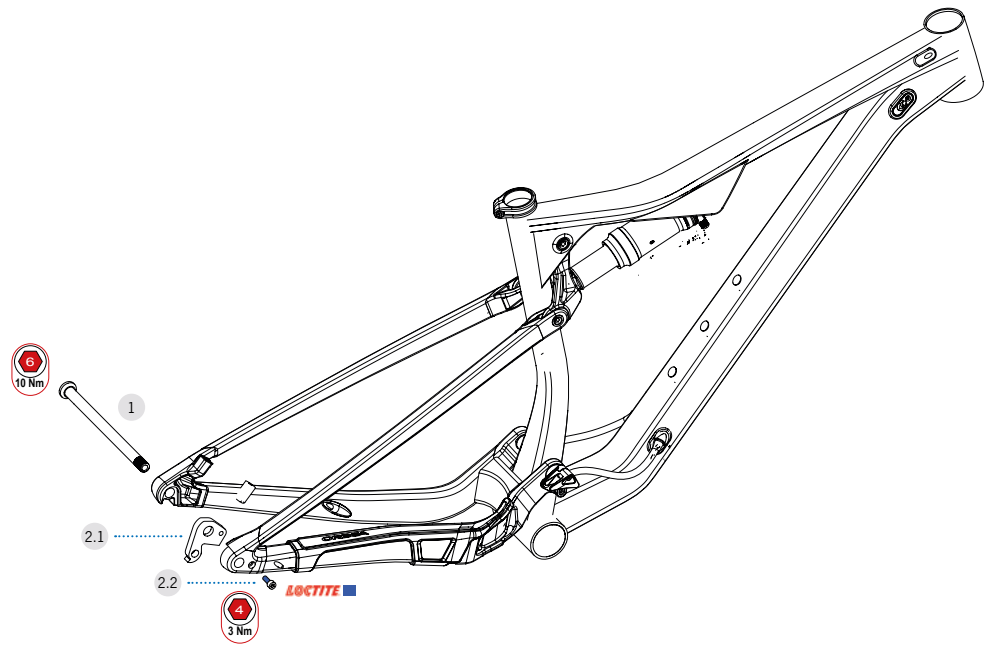

LOCTITE
Serie 200

REAR AXLE OIZ H 20

01	ART Nº: X024	QUANTITY
	12x182x1.5 AXLE	1

DERAILLEUR HAGER STANDARD KIT

02	KIT Nº: X025	QUANTITY
2.1	DERAILLEUR HANGER MTB X12 STD OIZ H	1
2.2	BOLT M5X18	1

LINKAGE

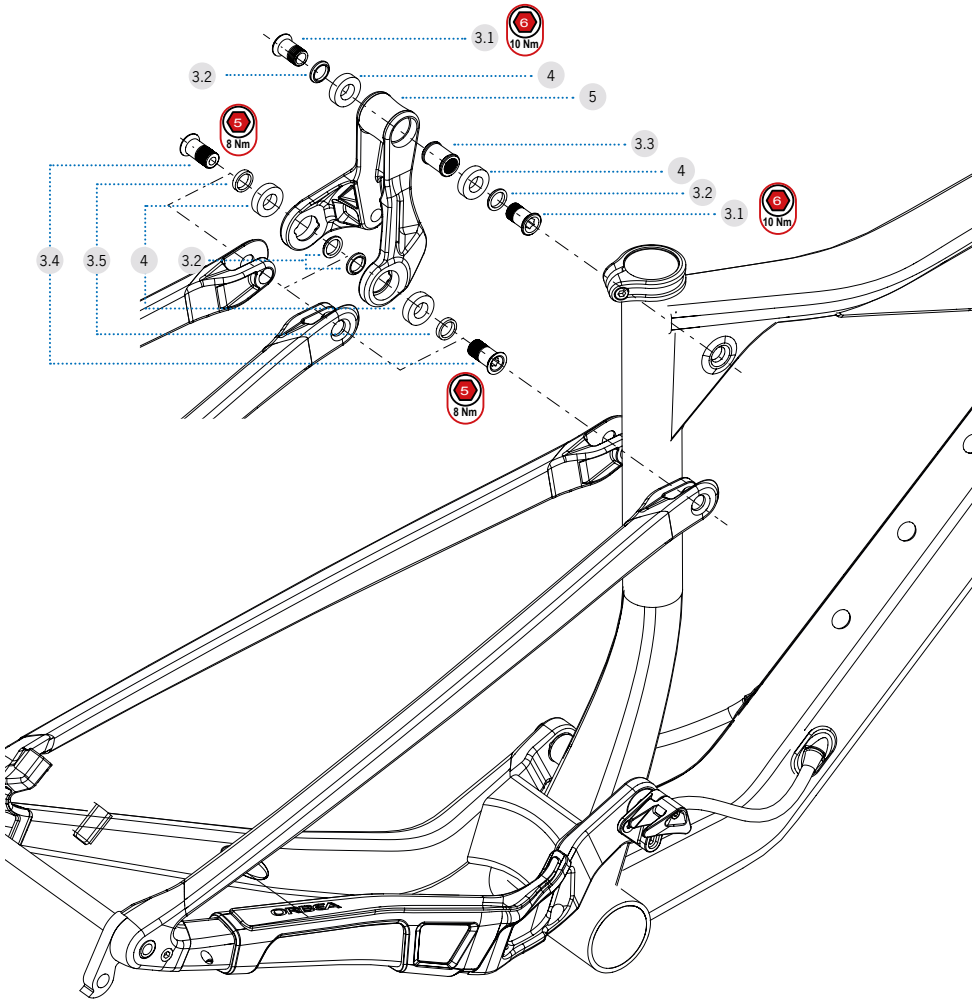

OIZ H 20 LINKAGE HARWARE KIT

03	KIT Nº: X005	QUANTITY
3.1	LINKAGE-FT BOLT	2
3.2	LINKAGE-FT/CS WASHER	4
3.3	LINKAGE-FT SPACER	1
3.4	LINKAGE-RT BOLT	2
3.5	LINKAGE-RT WASHER	2

OIZ H 20 LINKAGE BEARING KIT

04	KIT Nº: X006	QUANTITY
	BEARING 10X19X5	4

ALLOY LINKAGE OIZ H/OMR

05	ART Nº: X027	QUANTITY
	THE LINKAGE IS FRAME SIZE SPECIFIC: ONE SIZE FOR M/L/XL FRAMES ONE SIZE FOR 27S/29S FRAMES	1

SHOCK HARDWARE

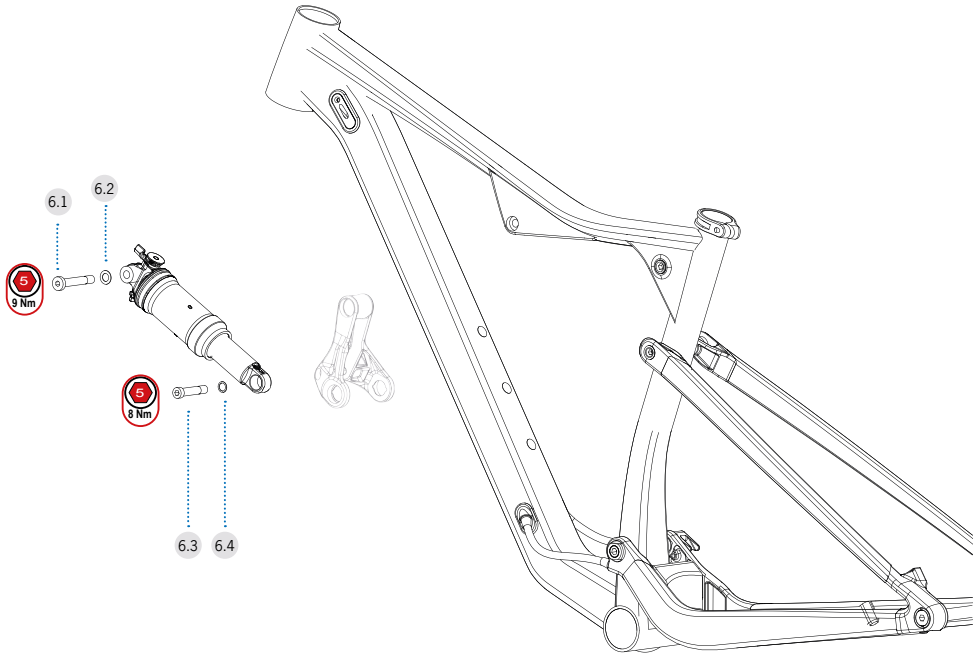

OIZ H 20 SHOCK HARDWARE KIT

06	KIT Nº: X028	QUANTITY
6.1	SHOCK-FT BOLT	1
6.2	SHOCK-FT WASHER	1
6.3	SHOCK-LINKAGE BOLT	1
6.4	SHOCK-LINKAGE WASHER	1

MAIN PIVOT

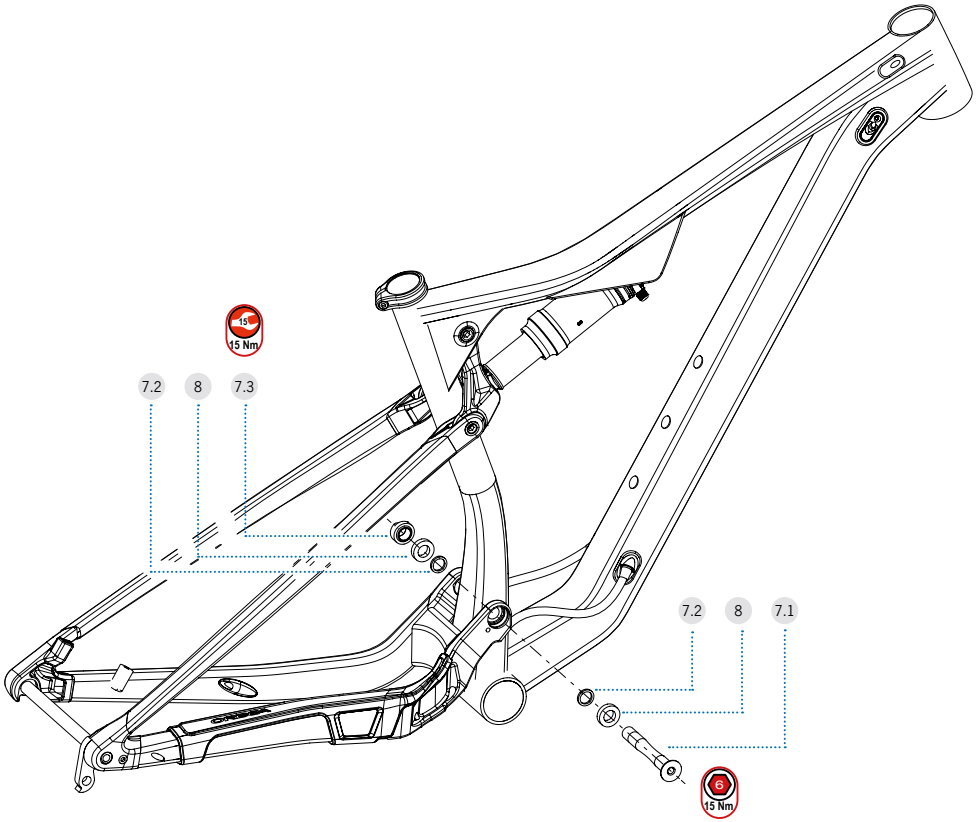

OIZ HYDRO MAIN PIVOT KIT

7	KIT Nº: X307	QUANTITY
7.1	EJE PTO GIRO PPAL	1
7.2	ARANDELA PTO GIRO PPAL	2
7.3	TUERCA PTO GIRO PPAL	1

MAIN PIVOT BEARING KIT

8	KIT Nº: X308	QUANTITY
	BEARING 12X21X5	2

FRAME HARDWARE

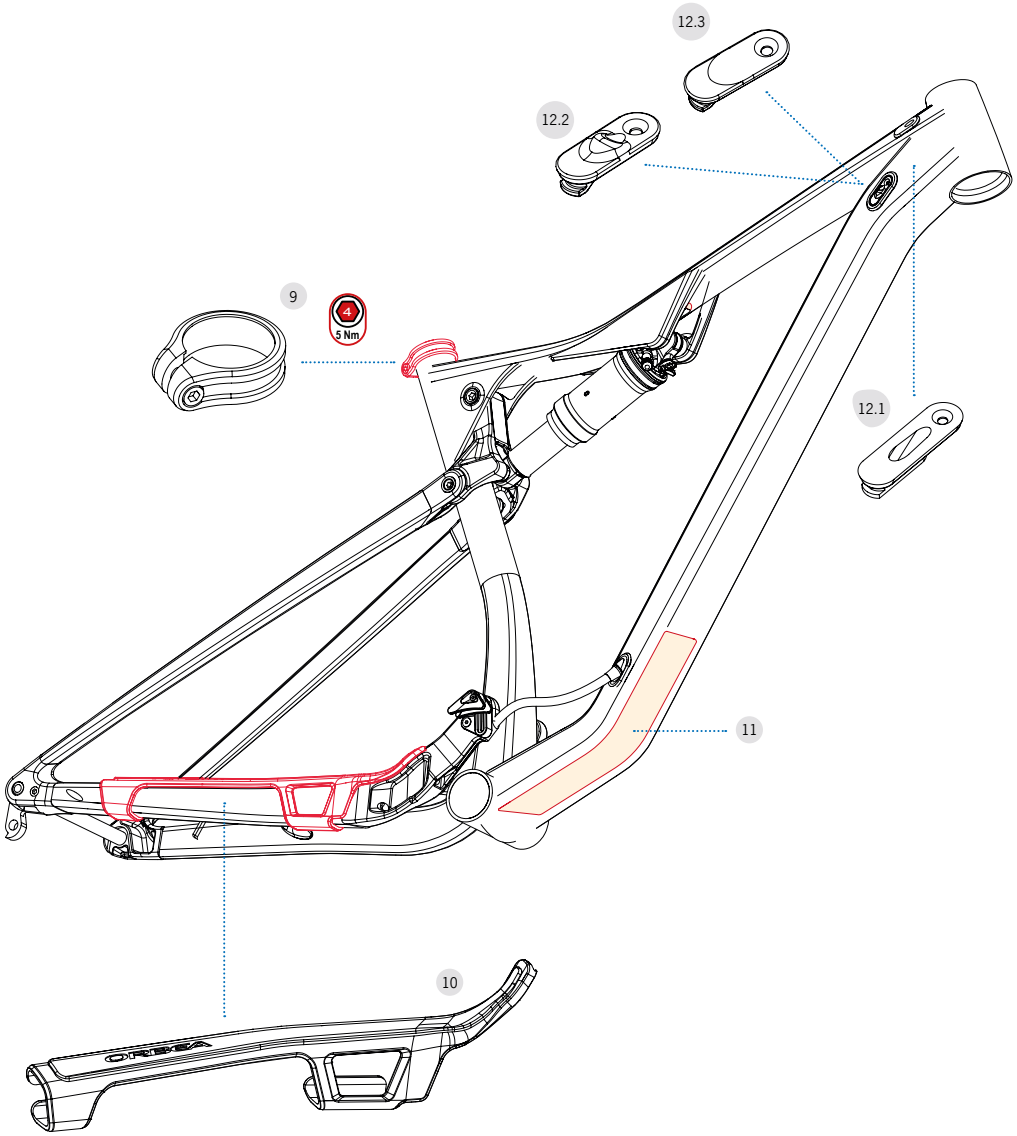

SEATCLAMP MTB 16 34,9

9	ART Nº: X202	QUANTITY
	SEATCLAMP MTB 16 34,9	1

CHAINSTAY PROTECTOR OIZ H 20

10	ART Nº: X309	QUANTITY
	CHAINSTAY PROTECTOR OIZ H 20	1

DOWNTUBE TRANSP PROTECTOR OIZ H 20

11	ART Nº: X310	QUANTITY
	THE PROTECTOR IS FRAME SIZE SPECIFIC: ONE SIZE FOR M/L/XL FRAMES ONE SIZE FOR 27S/29S FRAMES	1

CABLESTOP KIT OIZ H 20

12	KIT Nº: X311	QUANTITY
12.1	CABLESTOP DT LEFT DERAIL-BRAKE	1
12.2	CABLESTOP RIGHT DROPPER	1
12.3	CABLESTOP RIGHT BLIND	1
	BOLT M3X12	3

CHAINGUIDE

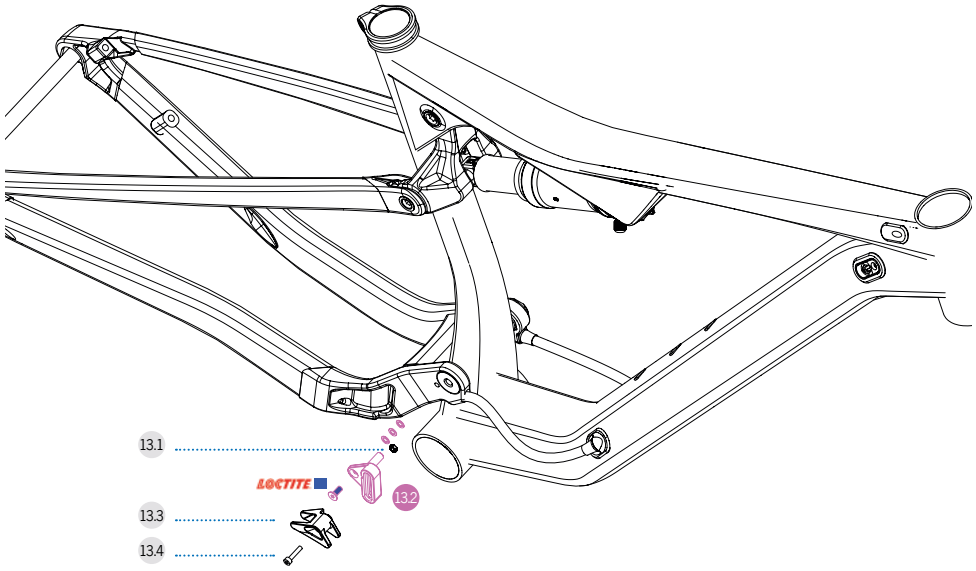

SPACERS	
SRAM	2 X 0,5
SHIMANO 1X12	2 X 0,5
SHIMANO 1X11	3 X 0,5

LOCTITE
Serie 200

CHAINGUIDE KIT OIZ HYDRO 20

13	KIT Nº: X312	QUANTITY
13.1	M3 NUT	1
13.2	OIZ 20 CHAINGUIDE KIT	1
	Chainguide bracket	
	washers (x3)	
	chainguide bolt	
13.3	CHAINGUIDE 1X	1
13.4	BOLT M3X15	1

CABLING

REAR DERAILLEUR AND REAR BRAKE

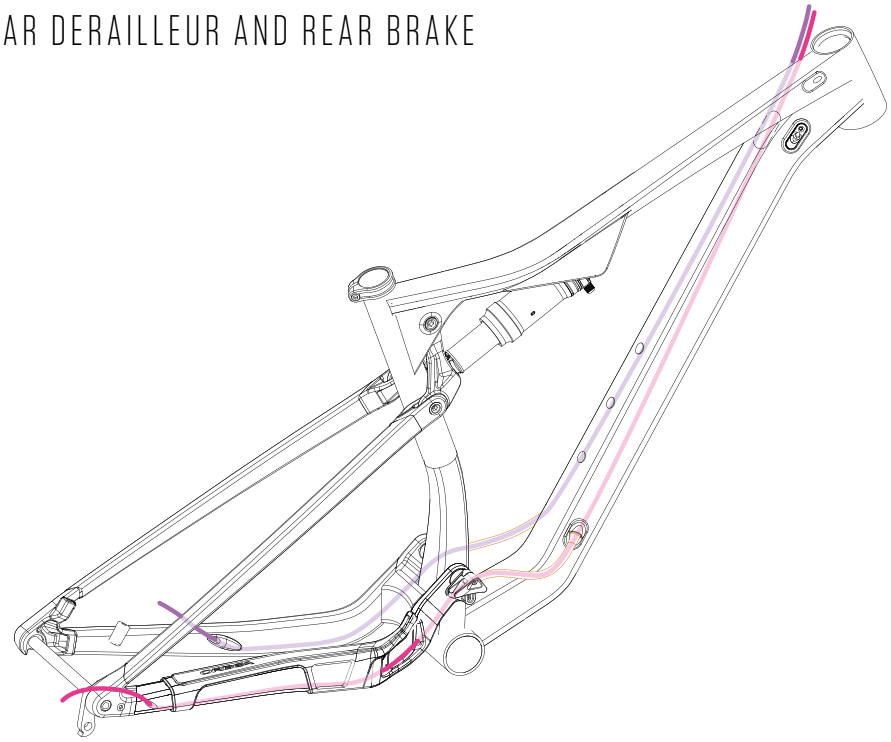

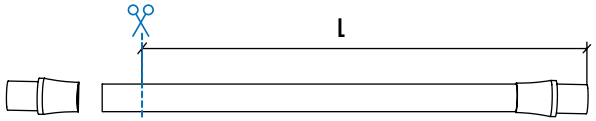

Cut the cable sleeves to the specificated lenght

L	S	M/L	L/XL
LEFT	150mm	165mm	180mm
RIGHT	150mm	165mm	180mm

FULLSUSP CABLE SLEEVES KIT

14	KIT Nº: X313	QUANTITY
24.1	FS CABLE SLEEVE (ONE SIZE)	2
24.2	FS SLEEVE FERRULE	2

CABLING

DROPPER AND SHOCK REMOTE

The shock´s remote cable must be cut so at least 3cm are left inside the top tube parallel to the outer cable.

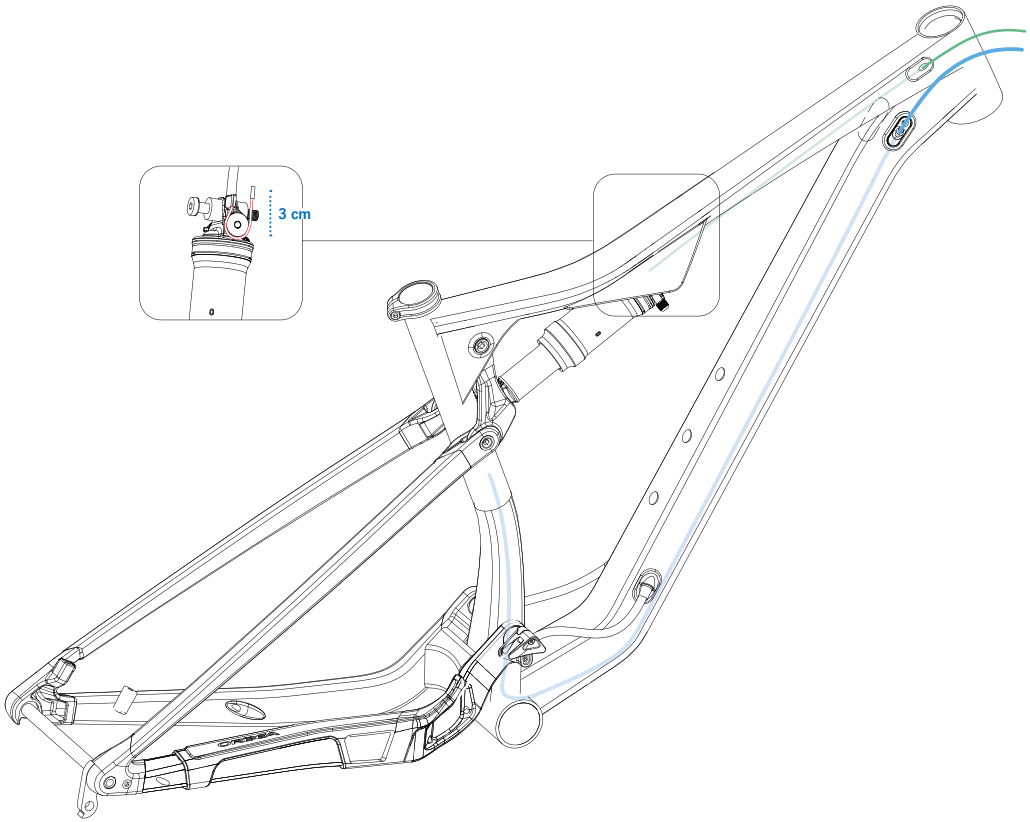

SHOCK PRESSURES

RECOMMENDED PRESSURES CHART

	XC (190X40)		TR (190X45)	
RIDER WEIGHT	AIR PRESSURE	REBOUND	AIR PRESSURE	REBOUND
KG	PSI	CLICKS (FROM COMPLETELY OPEN)	PSI	CLICKS (FROM COMPLETELY OPEN)
60	150	2	141	1
65	162	3	153	2
70	175	4	165	3
75	187	5	176	4
80	200	6	188	5
85	212	7	200	6
90	225	8	211	7
95	237	9	223	8
100	250	10	235	9

These pressures are aproximated values. Final pressures might change depending on riding style and conditions.

MAINTENANCE

Los productos Orbea son cuidadosamente diseñados para ser duraderos, eficientes y fáciles de mantener. Los cuadros de carbono y aluminio de OIZ son extremadamente resistentes a la corrosión.
Sin embargo, tu bicicleta Orbea necesita un mantenimiento periódico de sus componentes para su correcto funcionamiento y para asegurar su longevidad.

1) KEEP YOUR OIZ CLEAN

Washing your bike with mild soap and water will keep you looking stylish and allow you to check the condition of the frame and components. Don't use high water pressure and avoid spraying water into bearings or frame tubes. Citrus degreasers are biodegradeable and do a great job of removing dirty grease from gears and chain.

2) KEEP YOUR OIZ LUBED

Once your bike is clean, it's a good time to put fresh lube on the chain. Use only enough to get inside the links and wipe off any excess because it will attract dirt. Headset and pivot bearings should be inspected every few months for smoothness and to ensure that the seals are intact and lube is clean.

3) INSPECT YOUR OIZ BEFORE YOU RIDE

Do a quick check before every ride to make sure your bike is in excellent condition. It is very common to discover small issues at home that can become big problems on the trail. CHAIN Is the chain dirty, noisy or dry? Clean and lube your chain before riding. BRAKES Check your brakes to make sure they are working correctly. Check for missing/loose caliper and rotor bolts. TIRES Look for damage to the sidewalls of your tires. Check and adjust tire pressure. WHEELS Spin the wheels and look for wobbles, check for loose or broken spokes. Check quick release levers to make sure they are functioning properly. FRONT END Stand over the saddle, pull on the brakes and rock the bike back and forth. Feel for any play or knocking that might indicate a loose headset, loose brake rotors or calipers, or worn fork bushings.

TEST RIDE Take a quick ride up and down the street to make sure your bike is shifting and braking properly. Listen for unusual noises.

4) BEARINGS

Bearings are one element subject to wear and tear. They must be in good condition to ensure that the other parts of the bicycle work correctly: on the wheels, the steering column and the bottom bracket, and particularly on the parts of the full suspension bicycle frame.
Regularly check to make sure that the bearings turn freely in their housing and there are no signs of lateral play. Bearings that do not turn properly or that have any lateral play must be replaced immediately in order to prevent wear and tear to the parts of the frame. Very damp weather conditions can cause the bearings to wear out faster. Avoid washing your bicycle with pressurized water hoses. If you have any questions, take your bicycle to an Orbea dealer for correct diagnosis and maintenance.

AFTER A CRASH OR IMPACT

Falling is part of riding and it's impossible to avoid minor accidents. If you crash your OIZ, please make sure you are okay and seek medical attention if necessary. If you are not injured, you should check your bike before continuing:

1) Inspect your frame and components for damage. Do not ride your bike if any problems are detected.

WHAT TO LOOK FOR

Inspect Frame and fork for evidence of cracking or bending. If cracks are discovered, discontinue use immediately.

Check the drivetrain and spin the wheels to make sure components are operating correctly. If you discover damage to your components, discontinue use immediately.

Even if you don't find any damage, pay careful attention to the sound of your bike when you continue riding. Unusual noises can be caused by cracks or other problems. A well-maintained bike will be quiet and free of creaks or squeaks. Investigate and locate the source of any new noises.

2) Bring your bike to your Orbea dealer for professional inspection. Some damage can only be detected by disassembling the bike to check for cracks or other signs of stress.

A crash or impact can put extraordinary stress on your bike and components, causing them to fail or to fatigue prematurely. Failure can happen suddenly with no warning, causing loss of control, serious injury or death.

WARRANTY

The constant effort we make every day to produce the highest quality bicycles enables us to offer the following warranty and coverage conditions:

LEGAL WARRANTY

Orbea guarantees its products by law for a period of 2 years or whatever has been stipulated as the legal warranty period in the country where the purchase was made, to the original owner of the bicycle/component.

This warranty covers Orbea products against manufacturing defects and/or lack of conformity and guarantees the repair or replacement of the defective product at no cost to the affected customer. Likewise, this warranty also covers paint, varnish and corrosion defects on all frames and rigid forks assembled on our bicycles during the period specified in the first paragraph of this warranty.

This warranty does not cover in any case damage derived from misuse or the lack of maintenance, or from the normal wear and tear of perishable parts, such as, but not limited to: seals, bearings, handlebar tape, spokes, hub, threads, tires, seat, etc.

See the full description of the coverage and the legal warranty conditions at:
https://www.orbea.com/int-en/warranty-benefits/

ORBEA LIFETIME WARRANTY

As a complement to the legal warranty, Orbea offers the original buyer of the bicycle, under the condition of having registered their bicycle on the Orbea website within a period of 30 days following its purchase, the Orbea Lifetime Warranty, which covers the frames and rigid forks we assemble on our bicycles, with no time limit, against manufacturing defects.

This warranty extends the original period of coverage against pain, varnish or corrosion defects on our frames and rigid forks for one additional year after the end of the legal warranty period.

See the full description of the coverage and the Lifetime Warranty conditions at:
https://www.orbea.com/int-en/warranty-benefits/

REGISTER YOUR BICYCLE

In order to benefit from the extension of the Orbea Lifetime Warranty, register your bike within the first 30 days of having purchased it at www.orbea.com

01. REGISTER YOUR ACCOUNT

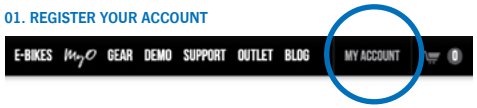

02. REGISTRATION NUMBER

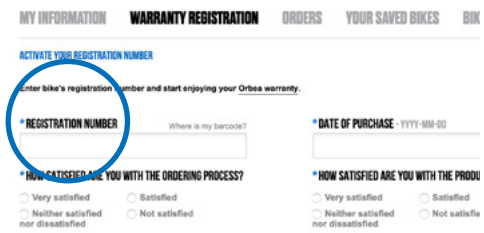

03. WHERE TO FIND YOUR NUMBER

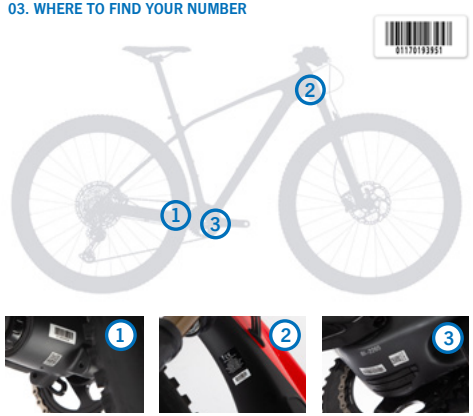

ADDITIONAL INFORMATION

WARRANTY CLAIM PROCESS

All warranty claim processes must be processed through an Orbea dealer, who will provide the company with the necessary documentation for the diagnosis of said claim. The dealer will inform the customer of the decision made by Orbea.

ORBEA participates actively on facebook and Twitter with our fantastic global community of riders. Looking to find spots to ride or plan a vacation? Someone will have the answers:

FACEBOOK
www.facebook.com/OrbeaBicycles

TWITTER
www.twitter.com/Orbea/

YOUTUBE
Visit our Orbea Channel on You Tube for a variety of helpful setup and tech videos:
www.youtube.com/user/OrbeaBicycles

INSTAGRAM
www.instagram.com/orbeabicycles

ORBEA CONTENT
View and download photos, videos and documents.
content.orbea.com/us-en/

BLOG ORBEA
www.orbea.com/es-es/blog/

YOUR ORBEA DEALER
Our dealers are experts and should be able to assist you with setting up and maintaining your Orbea bicycle. A com-plete listing of Orbea dealers and distributors can be located on our website:
www.orbea.com/us-en/dealers/?country=INT

SUPPORT
For technical questions about Orbea products, write to:
support@orbea.com

For any other question:
orbea@orbea.com

ORBEA
WWW.ORBEA.COM